PROJECT SITE AND AREA

cogency

Site Area Plan

2425 - Heywood BESS

2\TP20650

21B~A\PP3278

27~A\PP3278

29~A\PP3278

GOLF COURSE ROAD

RIFLE RANGE ROAD

MT CLAY ROAD

HENTY HIGHWAY

Portland Railway Line

Mount Clay State Forest

Note: due to the large parcel size of the Site, a Project Area has been defined that is more closely tied to the areas of work.

Existing Elements

- 275kV Tranmission Line
- 500kV Transmission Line
- Railway Line
- Roads
- Cadastre (Parcels)

Project Elements

- Site
- Project Area

Date: 01/05/2025

0 0.5 1 km

cogency

Project Area Plan

2425 - Heywood BESS

GOLF COURSE ROAD

RIFLE RANGE ROAD

2\TP20650

21B~A\PP3278

27~A\PP3278

29~A\PP3278

Mount Clay State Forest

Existing Elements

- 275kV Transmission Line
- 500kV Transmission Line
- Roads
- Wetland
- Cadastre (Parcels)

Project Elements

- Project Area
- Primary Parcel
- Primary Development Area (5.7ha)
- Underground transmission cable corridor (10m)

Date: 01/05/2025

0 100 200 m

EXISTING CONDITIONS

cogency

Existing Conditions Plan (Project Area)

2425 - Heywood BESS

2km
1.5km
1km
0.5km
Heywood Stockfeeds
HENTY HIGHWAY
Portland Railway Line
2\TP20650
21B~A\PP3278
27~A\PP3278
RILE RANGE ROAD
Heywood Terminal Station
GOLF COURSE ROAD
Heywood Golf Club
29~A\PP3278
Mount Clay State Forest

Existing Elements

- Dwelling
- Landowner dwelling
- Railway
- Road
- Distance from primary parcel
- Cadastre (parcels)

Transmission Lines

- 500kV
- 275kV
- 22kV
- 12.7kV
- Transmission tower / pole

Land Use

- Utilities
- Industrial
- Agricultural
- Recreation
- Forest
- Rural Residential

Project Elements

- Project Area
- Primary Development Area
- Underground transmission cable corridor (10m)

Date: 02/05/2025

0 250 500 m

cogency

Existing Conditions Plan (Primary Parcel)

2425 - Heywood BESS

Existing Elements

- Dwelling
- Landowner dwelling
- Trees
- Tree protection zones
- Wetlands_Heywood
- Road
- Transmission easement
- Cadastre (parcels)

Transmission Lines

- 12.7kV
- 500kV
- Transmission tower / pole

Project Elements

- Project Area
- Primary Development Area
- Underground transmission cable corridor (10m)

Elevation (m)

65

25

Date: 02/05/2025

0 50 100 m

cogency

Existing Conditions Plan (Transmission Corridor)

2425 - Heywood BESS

31m
35m
40m
45m
50m
2\TP20650
62m
10m
21B~A\PP3278
780m
29~A\PP3278
27~A\PP3278
Heywood Terminal Station

Existing Elements

- Trees
- Tree protection zones
- Road
- Cadastre (parcels)

Transmission Lines

- 500kV
- Transmission tower / pole

Project Elements

- Project Area
- Primary Development Area
- Underground transmission cable corridor (10m)

Elevation (m)

65
25

Date: 02/05/2025

0 50 100 m

DESIGN PLANS

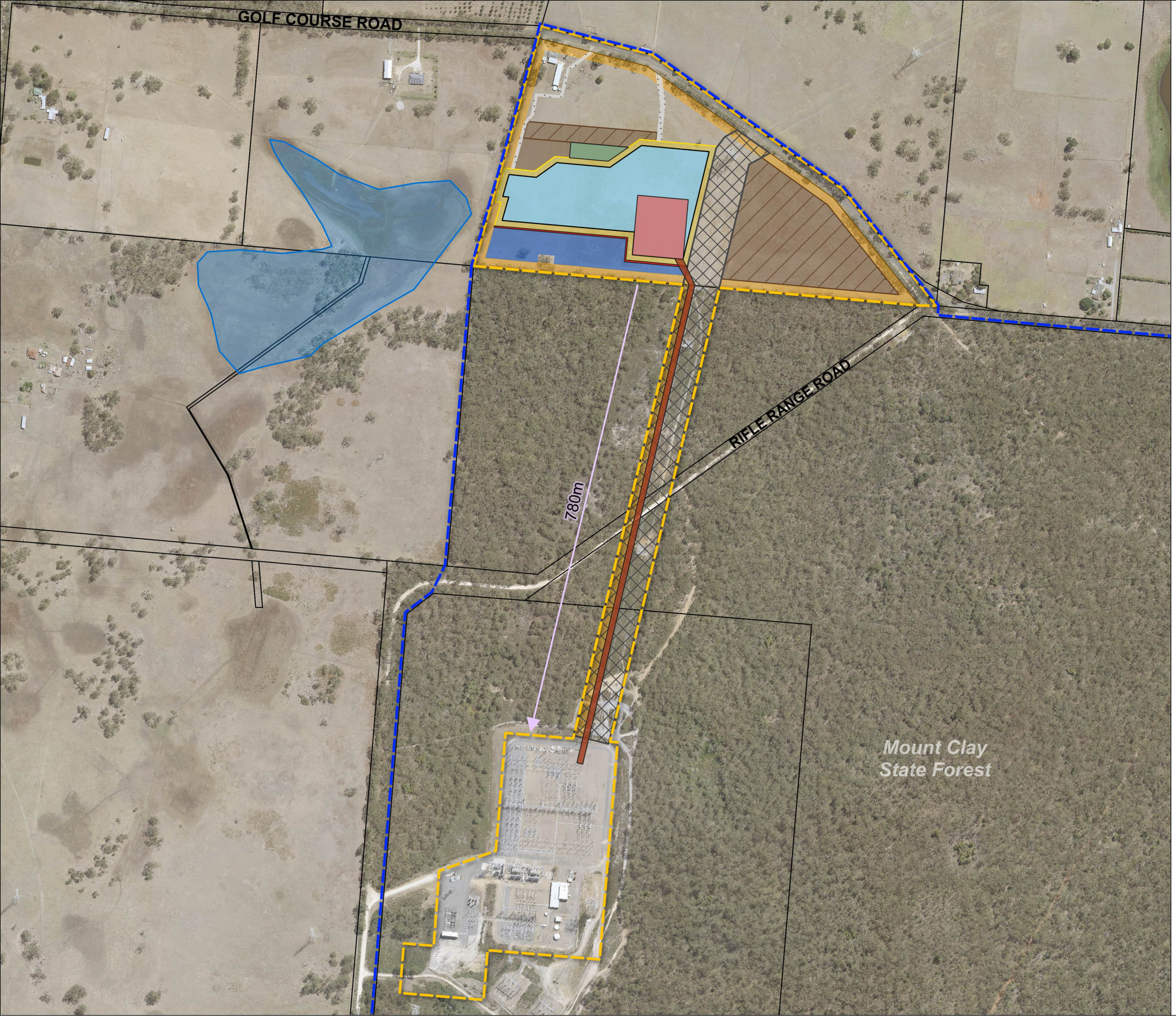

Atmos RENEWABLES

Concept Layout Areas Plan (Project Area)

2425 - Heywood BESS

- Site
- Project Area

Primary Development Areas

- Area for batteries and inverters
- Area for substation
- Area for O&M facility
- Radiant heat barrier
- Area for laydown
- Asset protection zone (10m)

Other Development Components

- Underground transmission cable corridor (10m)
- Access roads
- Temporary laydown area
- Area for stormwater retention
- Boundary Setback (exclusion zone - except for vegetation planting)

Existing

- AusNet transmission easement
- Wetland
- Cadastre (parcels)

Please note the Project is in early concept design and is subject to change.

Date: 01/05/2025

0 100 200 m



Atmos RENEWABLES

Concept Layout Areas Plan

2425 - Heywood BESS

Primary parcel

Primary Development Areas

- Area for batteries and inverters
- Area for substation
- Area for O&M facility
- Radiant heat barrier
- Area for laydown
- Asset protection zone (10m)

Other Development Components

- Underground transmission cable corridor (10m)
- Access roads
- Temporary laydown area
- Area for stormwater retention
- Boundary Setback (15m exclusion zone - except for vegetation planting)

Existing

- AusNet transmission easement
- Wetland
- Cadastre (parcels)

Please note the Project is in early concept design and is subject to change.

Date: 02/05/2025

0 50 100 m

GOLF COURSE ROAD

Tree & TPZ

150m

80m

5m

42m

67m

80m

29m

40m

10m

Mount Clay
State Forest

RIFLE RANGE ROAD

Atmos RENEWABLES

Concept Layout Areas Plan & TPZs

2425 - Heywood BESS

Primary Development Areas

- Area for batteries and inverters
- Area for substation
- Area for O&M facility
- Radiant heat barrier
- Area for laydown
- Asset protection zone (10m)

Other Development Components

- Underground transmission cable corridor (10m)
- Access roads
- Temporary laydown area
- Area for stormwater retention
- Boundary Setback (15m exclusion zone - except for vegetation planting)

Existing

- Trees
- TPZs
- AusNet transmission easement
- Wetland
- Cadastre (parcels)

Please note the Project is in early concept design and is subject to change.

Date: 09/05/2025

0 50 100 m



DETAIL - 1
SCALE 1:250

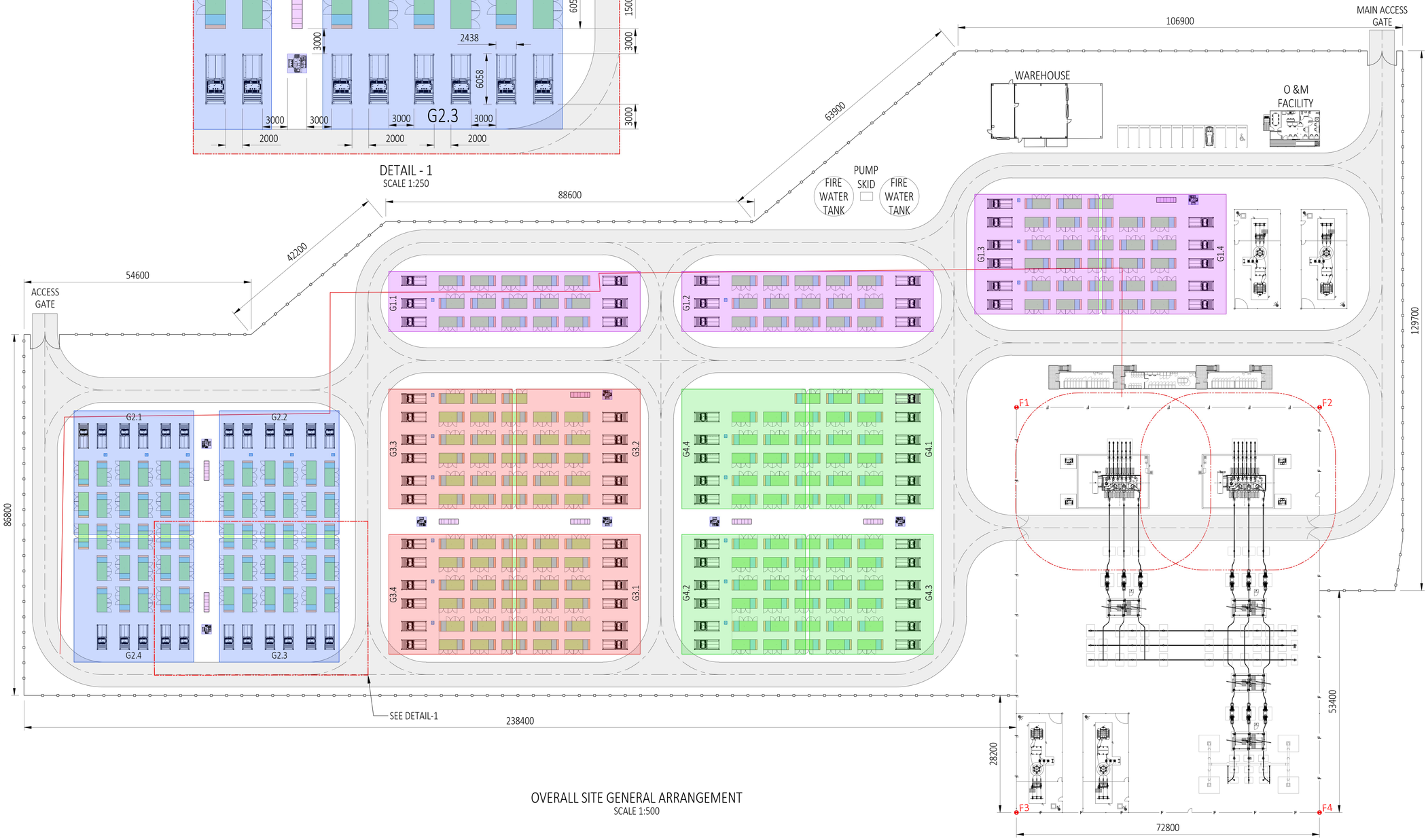

OVERALL SITE GENERAL ARRANGEMENT
SCALE 1:500

NOTES:

1. ALL DIMENSIONS ARE IN MILLIMETERS UNLESS NOTED OTHERWISE.

LEGEND:

- BESS FACILITY PERIMETER FENCE
- NOISE COMPLIANCE BOUNDARY
- SUBSTATION PERIMETER FENCE
- BATTERY CONTAINER
- POWER CONVERSION UNIT
- AUXILIARY TRANSFORMER KIOSK
- LOW VOLTAGE DISTRIBUTION BOARD
- COMMS EQUIPMENT

SYSTEM QUANTITIES			
EQUIPMENT	MAKE	MODEL	QTY
BATTERY CONTAINER	SAFT	GSP5000	232
POWER CONVERSION UNIT	SMA	MVPS 4600-S2	92

0 10 20 30 40 50 m
SCALE BAR 1:500

0 5 10 15 20 25 m
SCALE BAR 1:250

Rev	Revision Details	DATE	DRN	DES	ENG CHK	REG ENG	REG No	Drawing No.	Reference Title
A	ISSUED FOR REVIEW	17/04/2025	RA	RM	FG				

ATMOS Renewables

This drawing and the related information have been prepared by, or at the request of, Beyond Electrical Engineering (BEE) for a Specific purpose and may not be used for any purpose other than the purpose intended by BEE. BEE does not provide any warranties and accepts no liability arising out of the use of this drawing or any of the related information for any purpose other than the intended purpose. This drawing is protected by copyright and no part of this drawing may be reproduced in any form without the express written permission of BEE.

Beyond Electrical Engineering
www.beeng.com.au

HEYWOOD BESS
275/33kV SUBSTATION AND BESS
OVERALL SITE
GENERAL ARRANGEMENT
NOT FOR CONSTRUCTION

Drawing Status: *PRELIMINARY*
Drawing N°: 250479-ELE-LAY-0001
Size: A1 | Scale: 1:500 | Rev N°: A

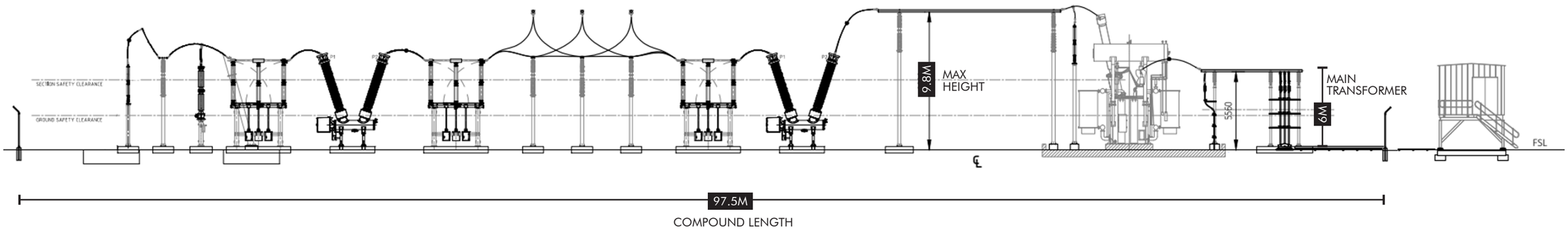

SUBSTATION | EAST ELEVATION

1:300 @ A3

0 2.5 5 7.5 10 12.5 15

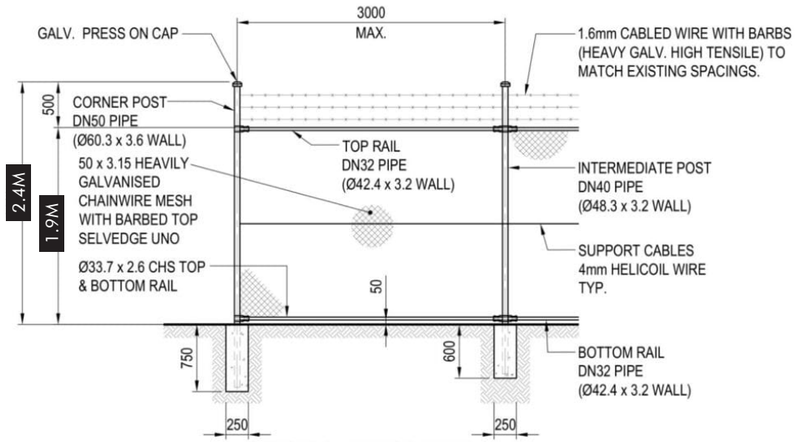

SECURITY FENCING

NTS

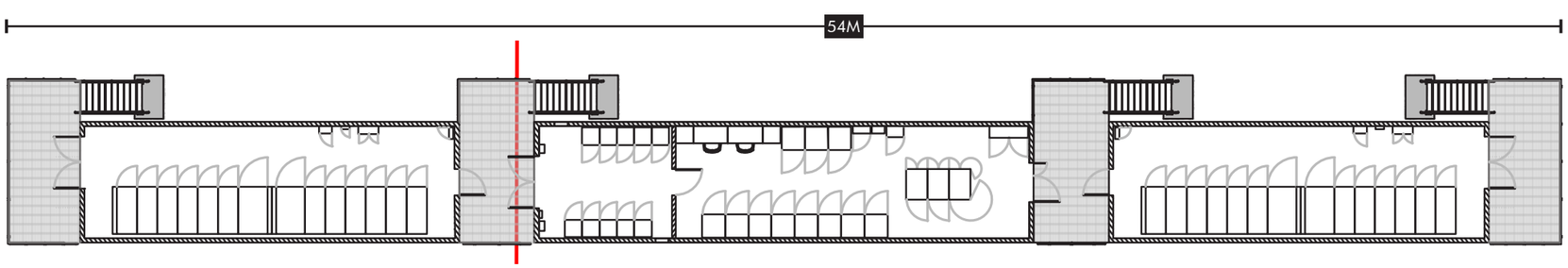

CONTROL ROOM | PLAN

1:500 @ A3

0 2.5 5 7.5 10 12.5 15

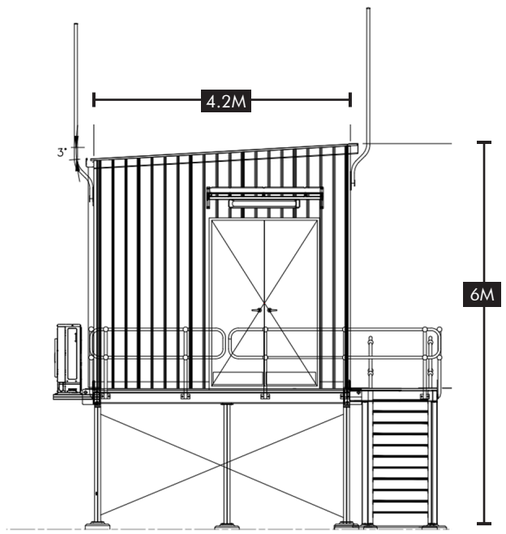

CONTROL ROOM | ELEVATION

1:100 @ A3

0 1 2 3

TYPICAL COMPONENTS
HEYWOOD BESS

DATE: 14/05/25
DWG NO: 1

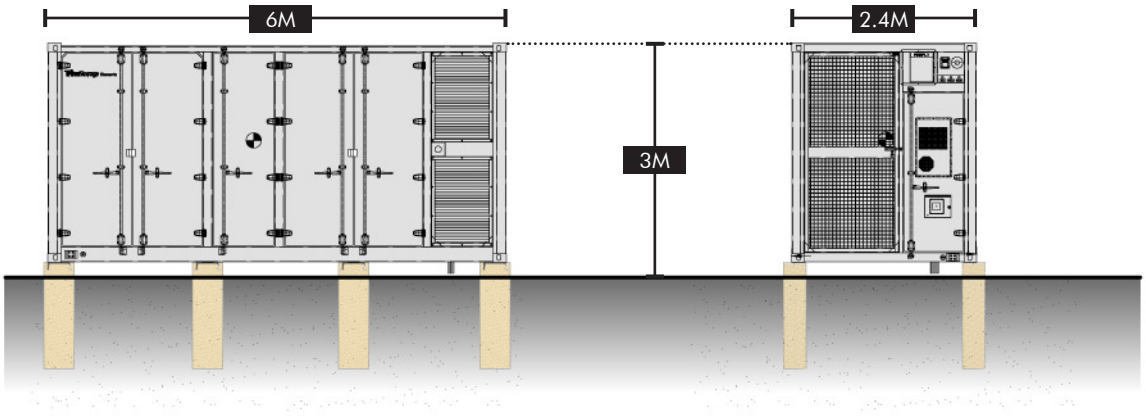

Front View

Side View

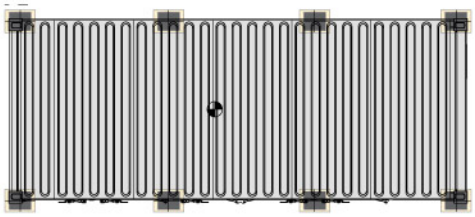

Top View

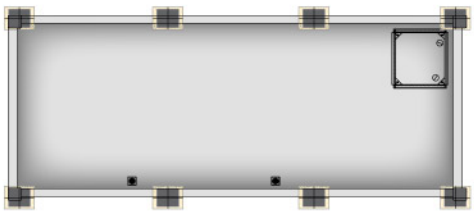

Interior Top View

BESS UNITS | ELEVATIONS + PLANS

1:100 @ A4

0 1 2 3 4 5

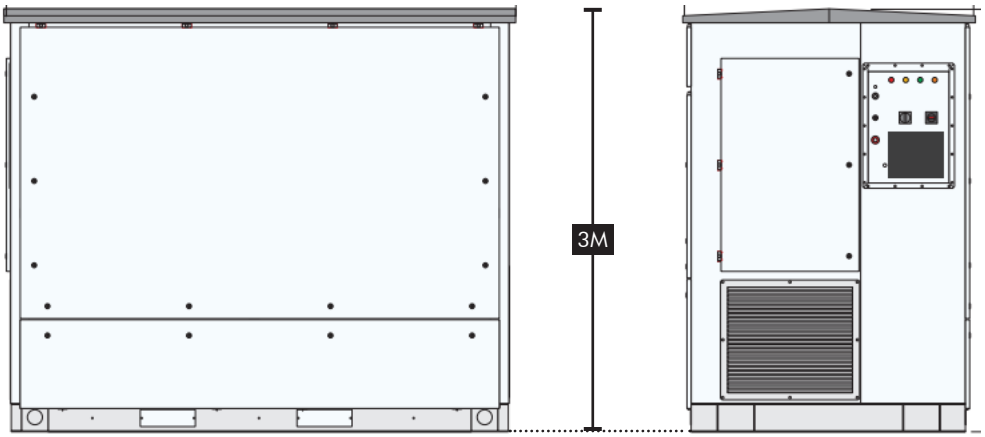

FRONT VIEW

SIDE VIEW

INVERTER | ELEVATIONS

NTS

TYPICAL COMPONENTS
HEYWOOD BESS

DATE: 14/05/25
DWG NO: 2



OPERATIONS & MAINTENANCE BUILDING | PERSPECTIVE

NTS

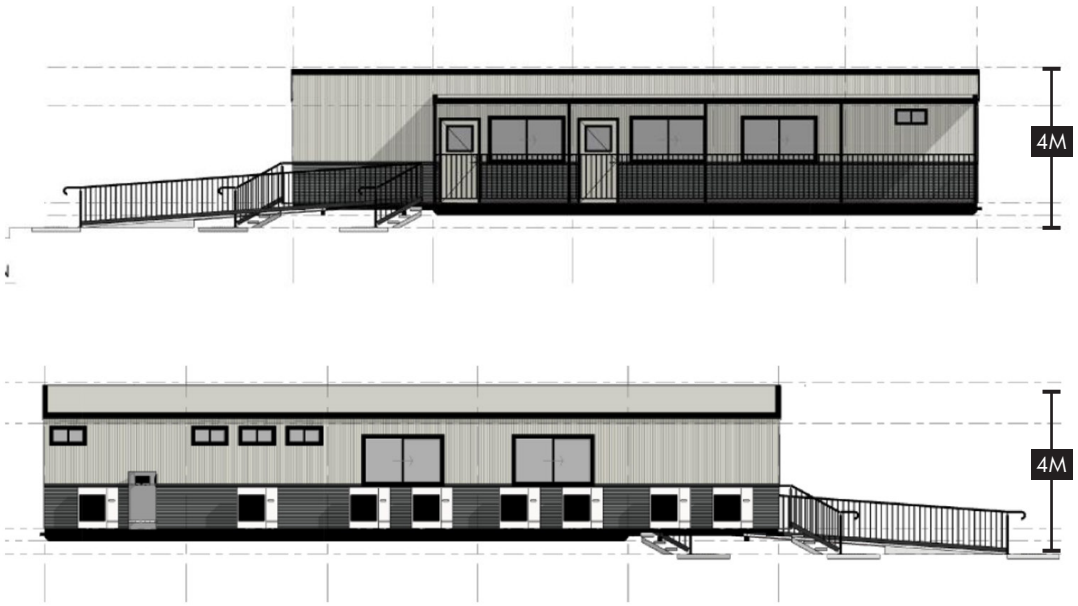

OPERATIONS & MAINTENANCE BUILDING | ELEVATIONS

1:150 @ A4

TYPICAL COMPONENTS
HEYWOOD BESS

DATE: 14/05/25
DWG NO: 3



WAREHOUSE

NTS



WATER TANK

NTS



RADIANT HEAT BARRIER

NTS

TYPICAL COMPONENTS
HEYWOOD BESS

DATE: 14/05/25
DWG NO: 4